SPECIFICATION APPLIED

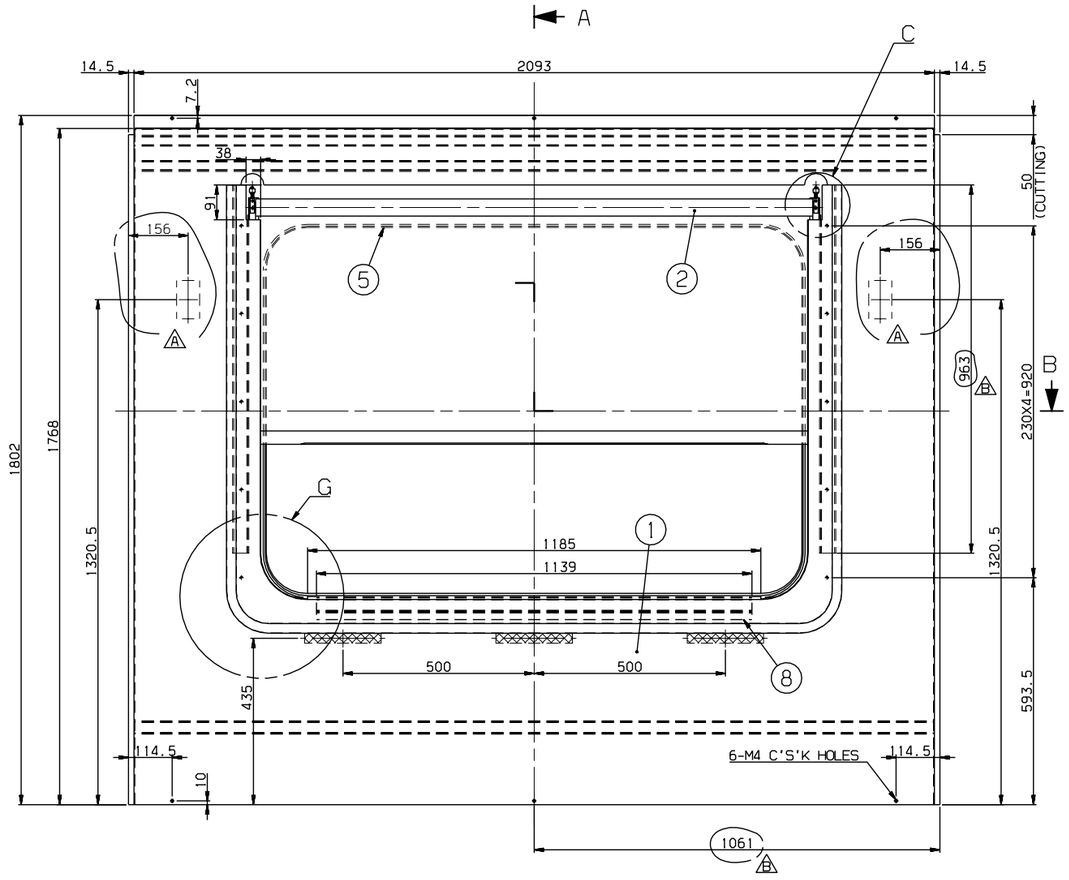

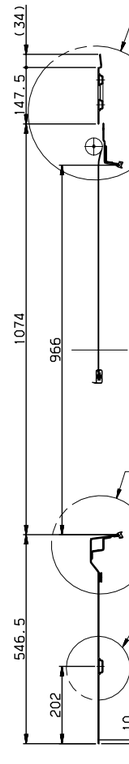

SECTION A-A

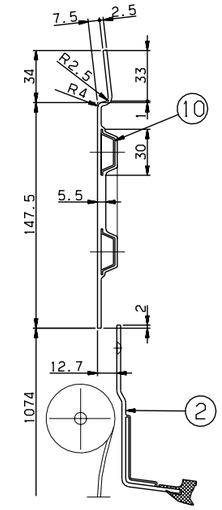

DETAIL D
SCALE=1/2

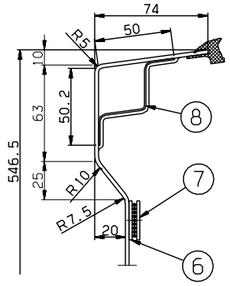

DETAIL E
SCALE=1/2

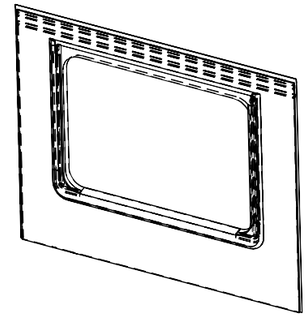

ISO VIEW

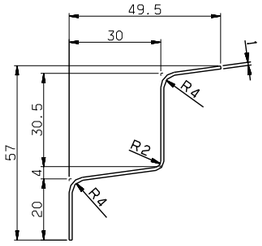

DETAIL #8
SCALE=1/1

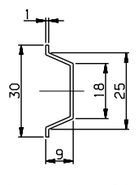

DETAIL #10
SCALE=1/1

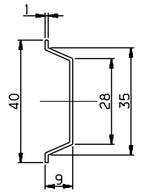

DETAIL #9
SCALE=1/1

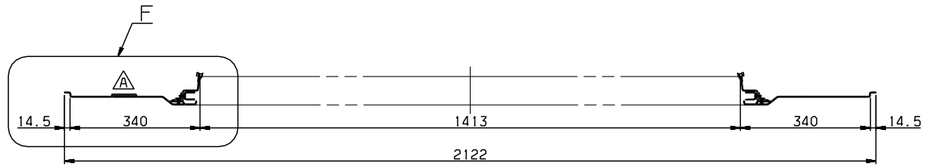

SECTION B-B

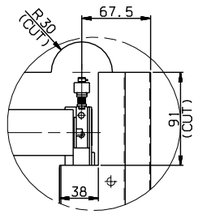

DETAIL C
SCALE=1/3

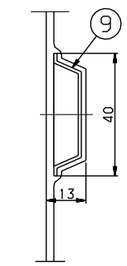

DETAIL H
SCALE=1/1

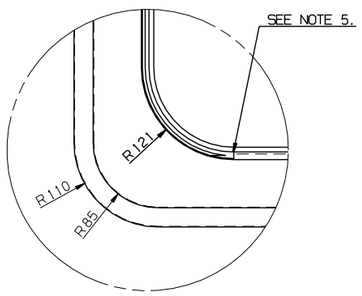

DETAIL G
SCALE=1/4

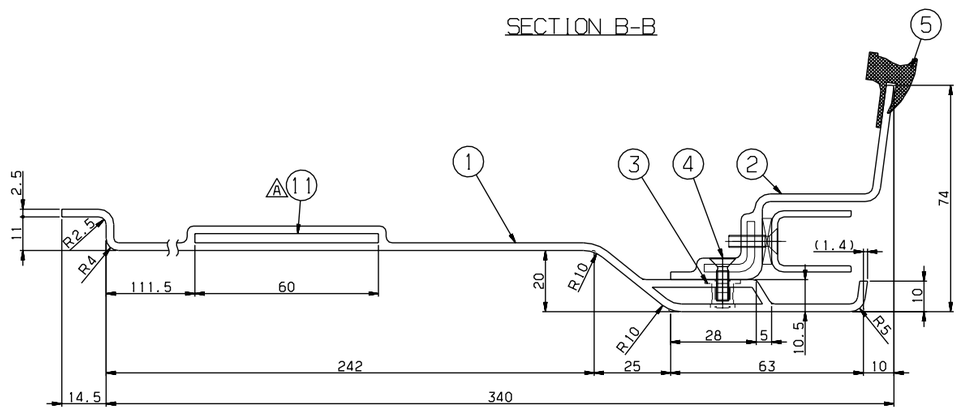

DETAIL F
SCALE=1/1

NOTE

1. AN INTERIOR PANEL'S COLOR(RAL 7047) AND SURFACE SHALL BE MANUFACTURED AFTER SAMPLE'S APPROVAL BY CUSTOMER
2. PART 5 SHALL BE CUT ADEQUATELY AND USED
3. PART 2 SHALL BE WELL OPERATED UNDER CONDITION OF ASSEMBLY
4. PART 6 SHALL BE FIXED ON THE PART 1, AND PART 7 SHALL BE DELIVERED SEPERATETLY
5. THE INTERFACE BETWEEN PART 1 AND PART 2 SHALL BE STRONGLY SEALED
6. PART 4 SHOULD BE APPLIED WITH PART 12.

품번 NO.	부품 번호 PART NO.	품명 DESCRIPTION	재질 MATERIAL	수량 Q'TY	검증 V.T	비고 REMARKS
12	CP910004-406	ADHESIVE	ASSY	1		LOCTITE 242
11	RFP51028AN0-011	SEAT.TAP	SUS304	2		PL.T3X100X60
10	RFP51028AN0-010	STIFFENER	A1050P	2		T1
9	RFP51028AN0-009	STIFFENER	A1050P	1		T1
8	RFP51028AN0-008	STIFFENER	SUS304	1		T1,L=1135
7	RFP51028AN0-007	DUAL_LOCK FASTENER	ASSY	3		3M,SJ-3550 L=200(DUAL TAPE)
6	RFP51028AN0-006	DUAL_LOCK FASTENER	ASSY	3		3M,SJ-3551 L=200(DUAL TAPE)
5	RFP51028AN0-005	RUBBER,SECTION	ASSY	1		RFP51011AN0,L=4600
4	RS60607-0985	SCREW,F.H	SUS304	10		M4X14
3	RFP51028AN0-003	NUTSERT	SUS304	10		M4
2	RFP51009AN0	PANEL,BLIND WINDOW	ASSY	1		
1	RFP51028AN0-001	PANEL	FRP	1		T2.5

승인 APP	H.G.RYU 2009.03.03	재질 MAT'L	ASSY
검도 CHK	H.S.KIM 2009.03.03	중량 G.W	
설계 DGN	Y.D.KIM 2009.03.02	일반공차 MC	VD / CT
제도 DRG	S.W.LEE 2009.03.02	B	B / B
		SIZE	A1

TITLE: WINDOW, MASK, TYPE W

도면 번호 DRG. NO: RFP51028AN0 | MS | Ver. 00 | Rev. -B | 3D5101 | RFP- | 난-PRJT | 삼차본습 CATIA

SCALE 1/8 | 매수 SHEET 1 of 1

참조번호 REF. NO. FPP12276

기호 MARK	일자 DATE	변경내역 DETAIL OF REVISION(E.C ZONE)	설변번호 E.C NO.	설계 DGN	검도 CHK	승인 APP
Bx4	2014.12.18	ADDED PART NO.#12 & DIMENSION	3D5101-U181	H.U.LEE	K.B.PARK	J.Y.LEE
AX5	2011.02.11	ADDED PART NO.#11.	3D5101-U146	Y.T.KIM	K.B.PARK	J.H.PARK

HYUNDAI Rotem 현대로템주식회사

본 도면은 당사 재산으로써 무단복사/배포 금지. PROPERTY OF ISSUING ENTITY, CANNOT BE DISTRIBUTED OR REPRODUCED WITHOUT AUTHORIZATION.

주조 CASTING	~ 40	2	4
	~ 30	2	3
	~ 10	1	1.5
	< 3	0.5	1
리브 RIB	~3150	-	7
	~1600	4	5
	~ 800	3	4
	~ 400	2	3
	~ 200	1.5	2
	~ 100	1	1.5

등급 GRADE	A	B
주철, 주강품 CASTING (±)		
~20M	8	14 / 24
~15M	7	12 / 21
~12M	6	10 / 18
~8M	5	8 / 14
~4M	4	6 / 11
~2M	3	4 / 8
~1M	2	3 / 6
~315	1	2 / 4
~120	1	2 / 3
~30	1	1 / 1

등급 GRADE	A	B	C
용접 구조물 WELDING (±)			
~20M	-	6.0	8.0
~15M	-	5.0	7.0
~12M	-	4.0	6.0
~8M	-	3.0	5.0
~4M	0.8	2.0	4.0
~2M	0.5	1.2	3.0
~1M	0.3	0.8	2.0
~315	0.2	0.5	1.2
~120	0.15	0.3	0.8
~30	0.1	0.2	0.5
3~6	0.05	0.1	0.2

등급 GRADE	A	B	C
기계 가공품 MACHINING (±)			
일반공차 GENERAL TOLERANCE			